UNIVERSITY OF CAMBRIDGE INTERNATIONAL EXAMINATIONS
General Certificate of Education
Advanced Subsidiary Level and Advanced Level

CANDIDATE NAME

CENTRE NUMBER

CANDIDATE NUMBER

5759137987

PHYSICS **9702/23**

Paper 2 AS Structured Questions **October/November 2013**

1 hour

Candidates answer on the Question Paper.

No Additional Materials are required.

READ THESE INSTRUCTIONS FIRST

Write your Centre number, candidate number and name on all the work you hand in.
Write in dark blue or black pen.
You may use a pencil for any diagrams, graphs or rough working.
Do not use staples, paper clips, highlighters, glue or correction fluid.
DO **NOT** WRITE IN ANY BARCODES.

Answer **all** questions.

Electronic calculators may be used.
You may lose marks if you do not show your working or if you do not use appropriate units.

At the end of the examination, fasten all your work securely together.
The number of marks is given in brackets [ ] at the end of each question or part question.

For Examiner's Use	
1	
2	
3	
4	
5	
6	
7	
Total	

This document consists of **15** printed pages and **1** blank page.

DC (SLM/CGW) 64684/5
© UCLES 2013

Data

speed of light in free space, $c = 3.00 \times 10^{8}\ \text{m s}^{-1}$

permeability of free space, $\mu_0 = 4\pi \times 10^{-7}\ \text{H m}^{-1}$

permittivity of free space, $\varepsilon_0 = 8.85 \times 10^{-12}\ \text{F m}^{-1}$

$$\left(\frac{1}{4\pi\varepsilon_0} = 8.99 \times 10^{9}\ \text{m F}^{-1}\right)$$

elementary charge, $e = 1.60 \times 10^{-19}\ \text{C}$

the Planck constant, $h = 6.63 \times 10^{-34}\ \text{J s}$

unified atomic mass constant, $u = 1.66 \times 10^{-27}\ \text{kg}$

rest mass of electron, $m_e = 9.11 \times 10^{-31}\ \text{kg}$

rest mass of proton, $m_p = 1.67 \times 10^{-27}\ \text{kg}$

molar gas constant, $R = 8.31\ \text{J K}^{-1}\ \text{mol}^{-1}$

the Avogadro constant, $N_A = 6.02 \times 10^{23}\ \text{mol}^{-1}$

the Boltzmann constant, $k = 1.38 \times 10^{-23}\ \text{J K}^{-1}$

gravitational constant, $G = 6.67 \times 10^{-11}\ \text{N m}^2\ \text{kg}^{-2}$

acceleration of free fall, $g = 9.81\ \text{m s}^{-2}$

© UCLES 2013

Formulae

uniformly accelerated motion, $s = ut + \frac{1}{2}at^2$
$v^2 = u^2 + 2as$

work done on/by a gas, $W = p\Delta V$

gravitational potential, $\phi = -\frac{Gm}{r}$

hydrostatic pressure, $p = \rho gh$

pressure of an ideal gas, $p = \frac{1}{3}\frac{Nm}{V}\langle c^2 \rangle$

simple harmonic motion, $a = -\omega^2 x$

velocity of particle in s.h.m., $v = v_0 \cos \omega t$
$v = \pm \omega \sqrt{(x_0^2 - x^2)}$

electric potential, $V = \frac{Q}{4\pi\varepsilon_0 r}$

capacitors in series, $1/C = 1/C_1 + 1/C_2 + \ldots$

capacitors in parallel, $C = C_1 + C_2 + \ldots$

energy of charged capacitor, $W = \frac{1}{2}QV$

resistors in series, $R = R_1 + R_2 + \ldots$

resistors in parallel, $1/R = 1/R_1 + 1/R_2 + \ldots$

alternating current/voltage, $x = x_0 \sin \omega t$

radioactive decay, $x = x_0 \exp(-\lambda t)$

decay constant, $\lambda = \frac{0.693}{t_{\frac{1}{2}}}$

© UCLES 2013

[Turn over

Answer **all** the questions in the spaces provided.

For Examiner's Use

1 A cylindrical disc is shown in Fig. 1.1.

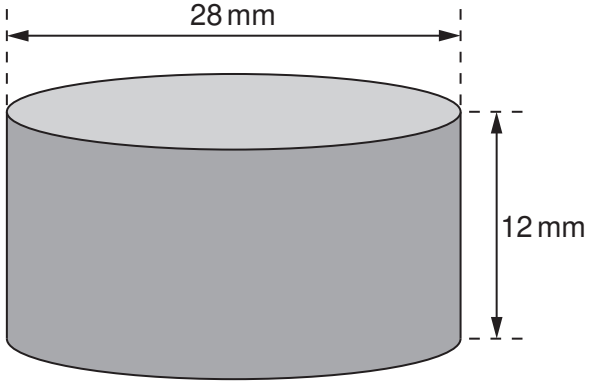

Fig. 1.1

The disc has diameter 28 mm and thickness 12 mm.
The material of the disc has density 6.8×10^3 kg m^{-3}.

Calculate, to two significant figures, the weight of the disc.

weight = ... N [4]

2 The time T for a satellite to orbit the Earth is given by

$$T = \sqrt{\left(\frac{KR^3}{M}\right)}$$

where R is the distance of the satellite from the centre of the Earth,
M is the mass of the Earth,
and K is a constant.

For Examiner's Use

(a) Determine the SI base units of K.

SI base units of K ..... [2]

(b) Data for a particular satellite are given in Fig. 2.1.

quantity	measurement	uncertainty
T	8.64×10^4 s	± 0.5%
R	4.23×10^7 m	± 1%
M	6.0×10^{24} kg	± 2%

Fig. 2.1

Calculate K and its actual uncertainty in SI units.

K = ... ± ..... SI units [4]

© UCLES 2013

[Turn over

3 **(a)** Define

For Examiner's Use

(i) *velocity*,

.....

.....[1]

(ii) *acceleration*.

.....

.....[1]

(b) A car of mass 1500 kg travels along a straight horizontal road.
The variation with time t of the displacement x of the car is shown in Fig. 3.1.

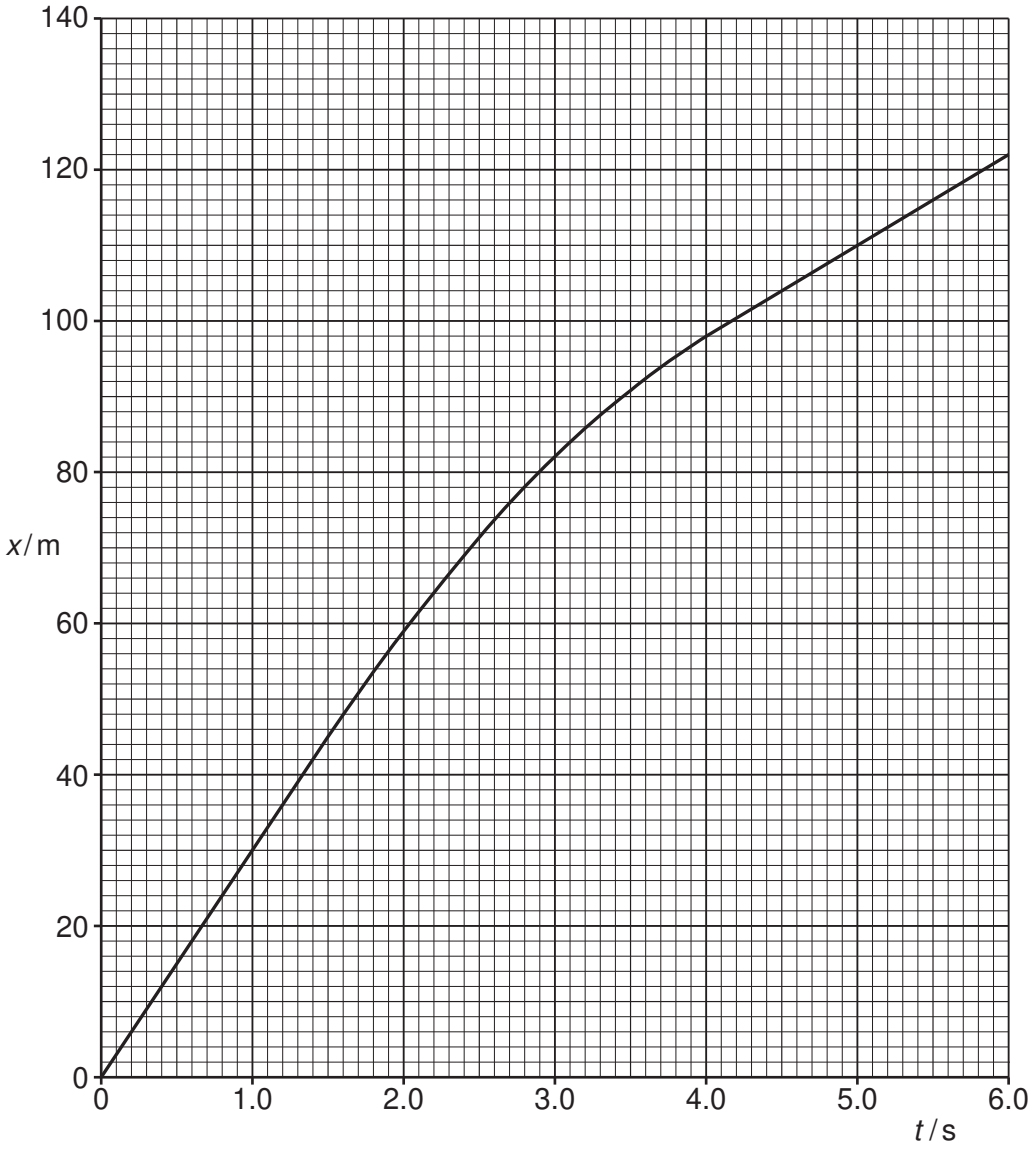

Fig. 3.1

For Examiner's Use

(i) Use Fig. 3.1 to describe qualitatively the velocity of the car during the first six seconds of the motion shown.
Give reasons for your answers.

.....

.....

.....

.....

.....[3]

(ii) Calculate the average velocity during the time interval $t = 0$ to $t = 1.5\,s$.

average velocity = ... $m\,s^{-1}$ [1]

(iii) Show that the average acceleration between $t = 1.5\,s$ and $t = 4.0\,s$ is $-7.2\,m\,s^{-2}$.

[2]

(iv) Calculate the average force acting on the car between $t = 1.5\,s$ and $t = 4.0\,s$.

force = ... N [2]

For Examiner's Use

4 **(a)** Distinguish between gravitational potential energy and elastic potential energy.

.....

.....

.....[2]

(b) A ball of mass 65 g is thrown vertically upwards from ground level with a speed of $16\,m\,s^{-1}$. Air resistance is negligible.

(i) Calculate, for the ball,

1. the initial kinetic energy,

kinetic energy = ... J [2]

2. the maximum height reached.

maximum height = ... m [2]

(ii) The ball takes time t to reach maximum height. For time $\frac{t}{2}$ after the ball has been thrown, calculate the ratio

$$\frac{\text{potential energy of ball}}{\text{kinetic energy of ball}}.$$

ratio = ... [3]

(iii) State and explain the effect of air resistance on the time taken for the ball to reach maximum height.

.....

.....

.....[1]

© UCLES 2013

5 (a) (i) Define, for a wave,

For Examiner's Use

1. wavelength λ,

.....

.....[1]

2. frequency f.

.....

.....[1]

(ii) Use your definitions to deduce the relationship between λ, f and the speed v of the wave.

[1]

(b) Plane waves on the surface of water are represented by Fig. 5.1 at one particular instant of time.

For Examiner's Use

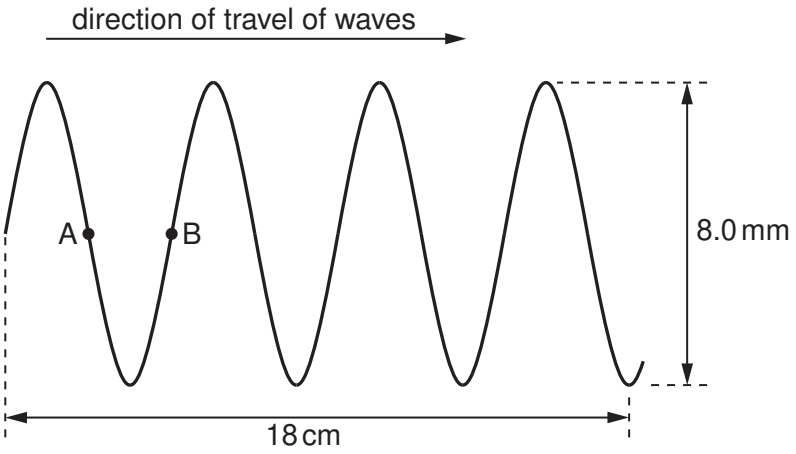

Fig. 5.1 (not to scale)

The waves have frequency 2.5 Hz.

Determine, for the waves,

(i) the amplitude,

amplitude = ... mm [1]

(ii) the speed,

speed = ... $m\,s^{-1}$ [2]

(iii) the phase difference between points A and B.

phase difference = ... unit ..... [1]

© UCLES 2013

(c) The wave in **(b)** was produced in a ripple tank. Describe briefly, with the aid of a sketch diagram, how the wave may be observed.

For Examiner's Use

.....

.....

.....

[2]

6 A battery connected in series with a resistor R of resistance 5.0 Ω is shown in Fig. 6.1.

For Examiner's Use

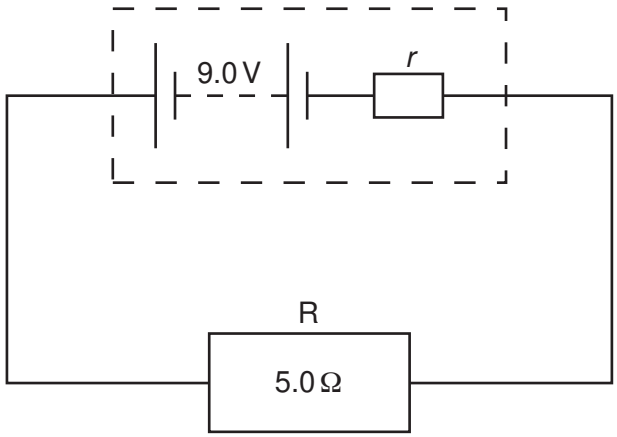

Fig. 6.1

The electromotive force (e.m.f.) of the battery is 9.0 V and the internal resistance is *r*.
The potential difference (p.d.) across the battery terminals is 6.9 V.

(a) Use energy considerations to explain why the p.d. across the battery is not equal to the e.m.f. of the battery.

.....

.....

.....[2]

(b) Calculate

(i) the current in the circuit,

current = ... A [2]

(ii) the internal resistance *r*.

r = ... Ω [2]

© UCLES 2013

(c) Calculate, for the battery in the circuit,

For Examiner's Use

(i) the total power produced,

power = ... W [2]

(ii) the efficiency.

efficiency = ... [2]

For Examiner's Use

7 **(a)** Two horizontal metal plates are connected to a power supply, as shown in Fig. 7.1.

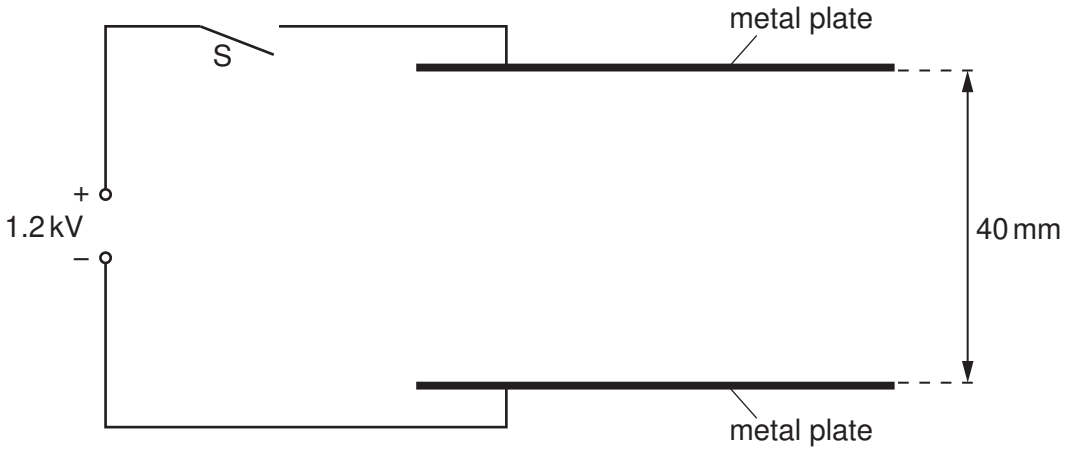

Fig. 7.1

The separation of the plates is 40 mm.

The switch S is then closed so that a potential difference of 1.2 kV is applied across the plates.

(i) On Fig. 7.1, draw six field lines to represent the electric field between the metal plates. [2]

(ii) Calculate the electric field strength E between the plates.

E = ... $V\,m^{-1}$ [2]

(b) The switch S is opened and the plates lose their charge. Two very small metal spheres A and B joined by an insulating rod are placed between the metal plates as shown in Fig. 7.2.

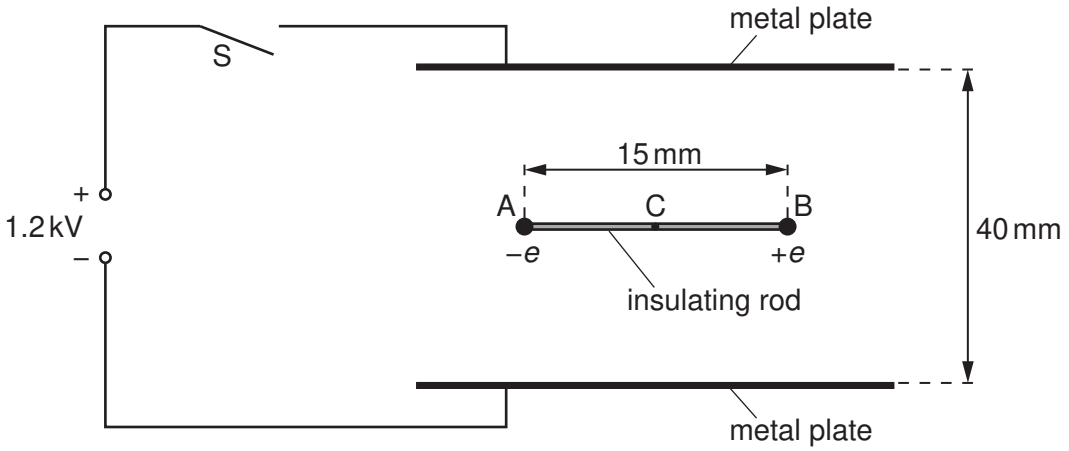

Fig. 7.2

Sphere A has charge $-e$ and sphere B has charge $+e$, where e is the charge of a proton. The length AB is 15 mm. The rod is supported at its centre C so that the rod is horizontal and in equilibrium.

For Examiner's Use

The switch S is then closed so that the potential difference of 1.2 kV is applied across the plates.

(i) There is a force acting on A due to the electric field between the plates. Show that this force is 4.8×10^{-15} N.

[2]

(ii) The insulating rod joining A and B is fixed in the position shown in Fig. 7.2. Calculate the torque of the couple acting on the rod.

torque = ... unit ..... [3]

(iii) The insulating rod is now released so that it is free to rotate about C. State and explain the position of the rod when it comes to rest.

.....

.....

.....

.....[2]

© UCLES 2013

BLANK PAGE

Permission to reproduce items where third-party owned material protected by copyright is included has been sought and cleared where possible. Every reasonable effort has been made by the publisher (UCLES) to trace copyright holders, but if any items requiring clearance have unwittingly been included, the publisher will be pleased to make amends at the earliest possible opportunity.

University of Cambridge International Examinations is part of the Cambridge Assessment Group. Cambridge Assessment is the brand name of University of Cambridge Local Examinations Syndicate (UCLES), which is itself a department of the University of Cambridge.

© UCLES 2013